DISASSEMBLY FOR REPAIR

1. DISASSEMBLING THE TONEARM

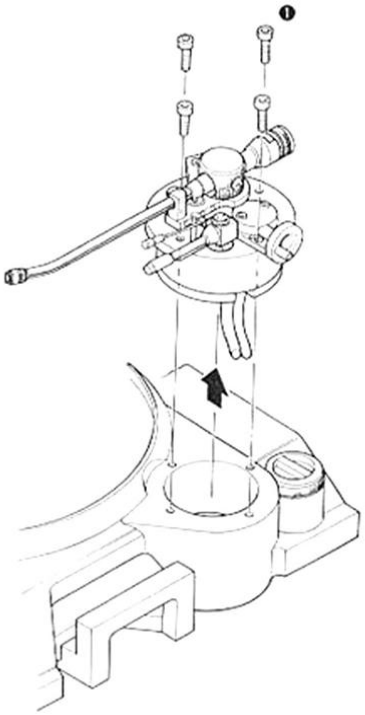

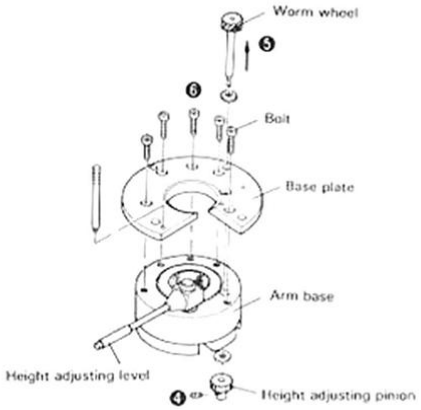

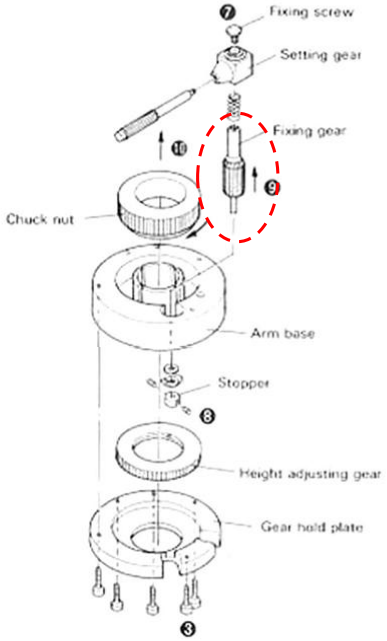

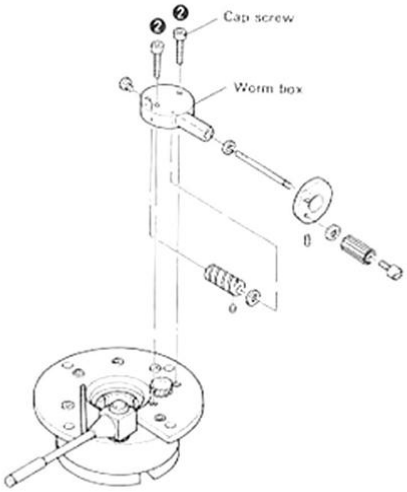

❶ Remove the bolt from the turntable case.
❷ Remove the cap screw from the worm box.
❸ Remove the bolt from the gear hold plate.
❹ Remove the setscrew from the height adjusting pinion.
❺ Pull out the worm wheel upwards.
❻ Remove the bolts from the base plate.
❼ Remove the fixing screw from the setting gear.
❽ Remove the setscrew from the stopper.
❾ Pull out the fixing gear upwards.
❿ Separate the chuck nut from the arm base.
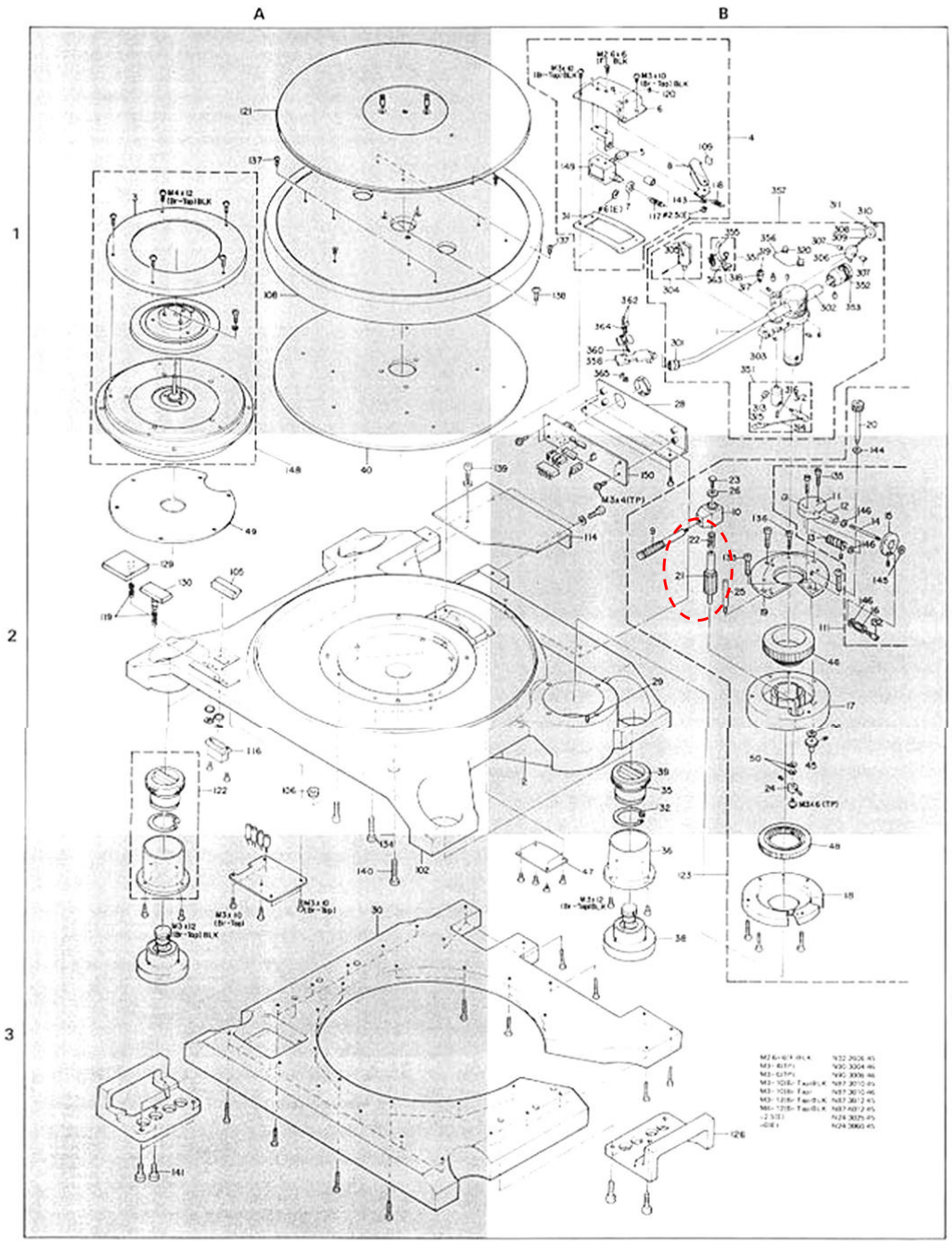
展開図